RIB100

MEMSPRESSURE TRANSMITTER

PRESSURE

MEMS Technology pressure transducer (Microelectromechanical system) For General Industrial Applications

General Specifications

Standard Pressure Range

Codice	Range [bar]	Codice	Range [bar]
A	-1...0	L	0...60
B	-1...1	M	0...100
C	0...2	N	0...160
D	0...4	O	0...200
E	0...6	P	0...250
F	0...10	Q	0...300
G	0...16	R	0...400
H	0...25	S	0...500
I	0...40	T	0...600

Other Pressure ranges are available. please conct Riels Instruments.

Specification				
Output signal	4...20mA	0...5Vdc	0...10Vdc	0,5...4,5 Vdc (ratiometric)
Power supply (Vs)	9...30Vdc (2 wire)	9...30Vdc (3 wire)	15...30Vd (3 wire)	5Vdc (3 wire)
Accuracy	±0.5%FS standard [on request: ±0.1%FS I ±0.3%FS]			
Over Pressure	300%xFS			
Burst pressure	500% FS			
Zero Drift	±0.02%FS/°C			
Thermal Sensitivity Shift	±0.02%FS/°C			
Longterm Stability (1 Year)	±0.1%FS			
Frequency Response (-3dB)	3.2kHz			
Compensated Temperature	-40...+85°C			
Working Temperature	-40...+125°C			
Storage Temperature	-40...+125°C			
Mechanical Vibration	±20g			
Impact (11ms)	100g			
Environmental Protection	IP68			
Housing Parts	17-4PH stainless steel			
Electromagnetic compatibility	EN61000-6			
Certificates	CE I RoHS			

RIB100 Pressure sensor can be used in the pressure testing in Pneumatic System, hydraulic system Meet the needs of the aerospace, defense, engineering machinery, automobile industry, air conditioning, refrigeration and other industrial facilities.

It is a silicon MEMS strain gauge sensor which is glass bonded to a stainless steel diaphragm. It avoids influences on product caused by temperature, humidity, mechanical fatigue and medium, thus to improve its longterm stability in the industrial environment. Its pressure chamber is made of 17-4PH stainless steel in an integrated way without welding seams or O-rings and free of leakage troubles. The sensor adopts the advanced digital Compensated Temperature and is featured with the strong interference resistance, wide working temperature scope and longterm stability, etc. The series products provide several optional pressure connections and electric connections for customers.

Applications

- Industrial process testing and control
- Automatic testing system
- Hydraulic and pneumatic systems
- Pump station and water treatment system
- Industrial machinery manufacture
- Process control system
- Refrigeration systems and valve
- Air compressors

Features

- Advance Microfused Silicon Strain Gauge, whole-designed elastomer, free of leakage troubles
- Efficient lightning protection and strong anti RFI&EMI protection.
- Advanced digital temperature compensation and wide working temperature scope
- High sensibility, high accuracy, high frequency response and longterm stability

RIB100

MEMSPRESSURE TRANSMITTER

PRESSURE

Dimensions (in mm)

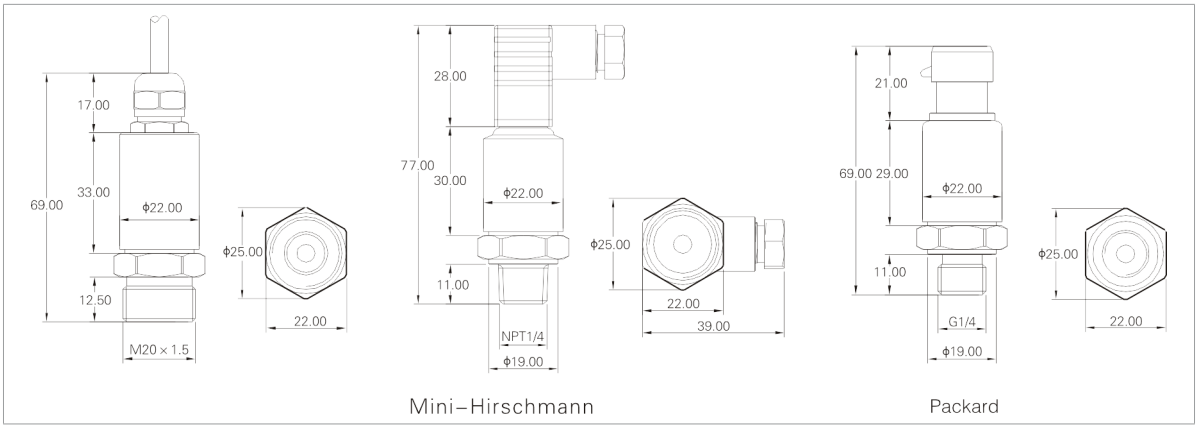

Electrical Connection Diagram

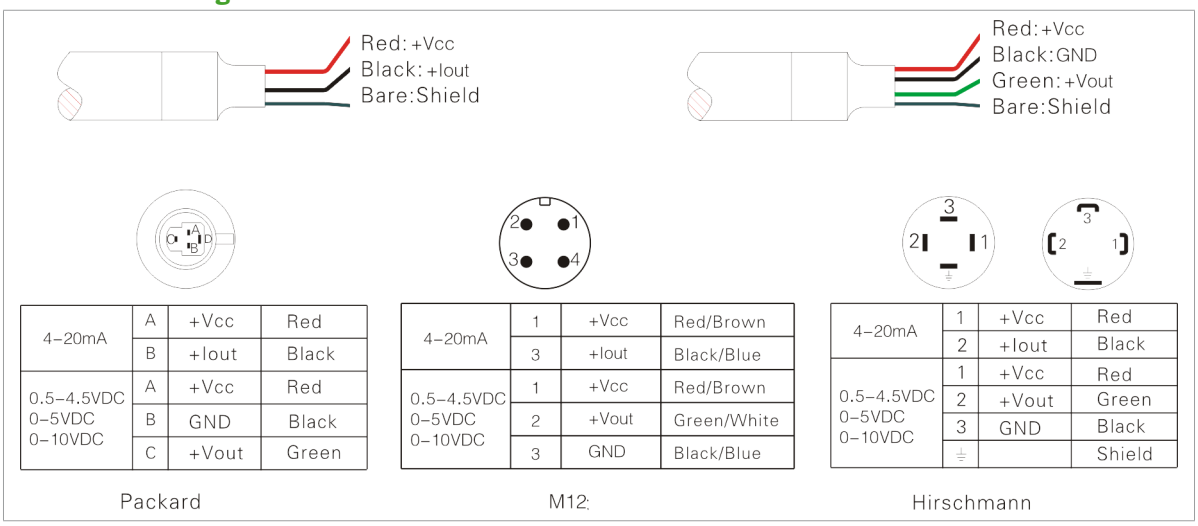

4–20mA	A	+Vcc	Red
	B	+Iout	Black
0.5–4.5VDC 0–5VDC 0–10VDC	A	+Vcc	Red
	B	GND	Black
	C	+Vout	Green

Packard

4–20mA	1	+Vcc	Red/Brown
	3	+Iout	Black/Blue
0.5–4.5VDC 0–5VDC 0–10VDC	1	+Vcc	Red/Brown
	2	+Vout	Green/White
	3	GND	Black/Blue

M12:

4–20mA	1	+Vcc	Red
	2	+Iout	Black
0.5–4.5VDC 0–5VDC 0–10VDC	1	+Vcc	Red
	2	+Vout	Green
	3	GND	Black
	⏚		Shield

Hirschmann

Ordering Information

Option 1	Type
RIB100	Pressure Transmitter

Option 2			
Code		Code	
A	-1...0	L	0...60
B	-1...1	M	0...100
C	0...2	N	0...160
D	0...4	O	0...200
E	0...6	P	0...250
F	0...10	Q	0...300
G	0...16	R	0...400
H	0...25	S	0...500
I	0...40	T	0...600

Option 3	Mechanical Connection
M2	M20x1.5 (male)
8	G1/4 (male)
15	G1/2 (male)
N4	1/4NPT (male)
U7	7/16-20UNF (male)
Nx	Customized

Option 4	Output signal
C	4...20mA
05	0...5Vdc
T	0...10Vdc
45	0.5...4.5 (ratiometric)

Option 5	Accuracy
05	0.5% FSO
10	1.0% FSO

Option 6	Electrical connection
D	Connector DIN43650
H	Connector Mini-Hirshmann
C	Packard connection
M	Cable outlet with PVC-cable, length=1.5 m

Option 7	Presusre type
G	Gauge
A	Absolute
-	-

Examples of Ordering Code: RIB100-E8C-05-D-G
Gauce Pressure Transducers, 0-6 bar, 4/20mA output, G1/4" G male, Connector DIN43650